www.solinerglobal.com

讯联股份®
SOLINER

SENSOR

P2P GLASS MICRO-FUSING PROCESS
SMALL VOLUME

>PRESSURE TRANSMITTER

>LIQUID LEVEL SENSOR

>TEMPERATURE SENSORS

Nanjing Soliner Hydraulic Technology Co.,Ltd.

ABOUT SOLINER

Nanjing Soliner Hydraulic Technology Co., Ltd©. established in 2003, is a leading manufacturer of the fluid industry in China. Specializing in design, manufacture, and comprehensive solutions of high-quality hydraulic components (filters, valves&manifolds, cycloid motors, gear pumps, accessories), gearbox lubrication system, and precision sensors, Soliner© has been trusted by industrial clients worldwide including Caterpillar, Hyundai, Komatsu, Hitachi, Goldwind, SANY, XCMG, Zoomlion, etc., with the products widely applied in construction machinery, metallurgy, aerospace, wind power, machine tools, petroleum, chemical, shipbuilding, and other industries.

Professional Technical Testing Center

With great commitment to excellence and perfection, Soliner© has been always keep a high standard of quality control. All products are to be fully tested before market by professional team and the most advanced testing equipment. The comprehensive technology testing center is surely to meet any testing demands desired by the clients.

Advanced Production Line

Soliner© owns domestic factories of multiple workshops covering more than 35,000m² of land in total, all powered by the most advanced industrial equipment such as ABB Robotics, Mazak Flexible Production Lines, Robuschi Equipment, etc., and an overseas factory located in Germany especially dedicated to sensors as a great step in the global strategy.

Customer Service

Soliner© believes that the priority must go to the fulfillment of interest and demands of customers, and therefore provides all kinds of products and service as long as they are needed by the customer, including customized design and modification, quick-response service team, and professional fluid solutions.

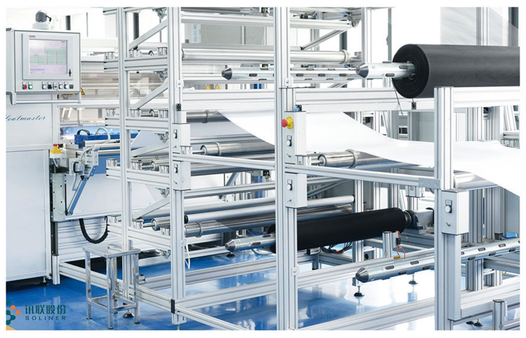

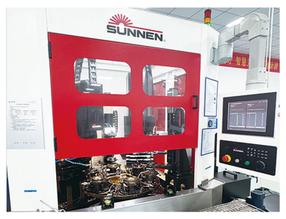

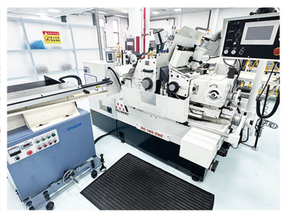

SANY
XCMG 徐工集团
LiuGong 柳工
SHANTUI
LONKING 龙工
XINYUAN
IHI
LOVOL
SUNWARD 山河智能
福龙马 FULONGMA
NGC
山东临工
ENVISION 远景能源
HYUNDAI HEAVY INDUSTRIES CO., LTD.
MINGYANG ELECTRIC 明阳电气
中国中车 CRRC
CAT
ZOOMLION 中联重科
运达风电 WINDEY
上海电气 SHANGHAI ELECTRIC
同力重工 TONLY
TZ
DEC 东方电气
GOLDWIND 金风科技
常发农装

Industries

Construction Equipment

Wind Power

Metallurgy

Agricultural Machinery

Petrochemical

Manufacturing

Aerospace

Marine and Ocean Engineering

Enterprise Culture

Overview of Sensor Products

The sensor solution integrates miniaturized pressure-sensing elements, efficient signal processing circuits, and intelligent algorithms to achieve monitoring of medium pressure. The core pressure-sensing element is made using glass micro-melting technology. It consists of a MEMS chip (Micro-Electro-Mechanical Systems chip) and a metal diaphragm. Our company's proprietary P2P glass micro-melting process enables the pressure-sensing element to achieve high precision and high robustness.

PMP222 series of pressure transmitters

Measurement Range: -1…0bar/0…2000bar
Electrical Signal: Two-wire 4...20 mA, 0.5...4.5 V Proportional Voltage Output
Overload Pressure: 20 32 50 80 120 200 320 500 800 1200 1400
Accuracy: ⩽0.5%FS

SPT Series Pressure Transmitters

Measurement Range: -1…0bar/0…2000bar
Electrical Signal: Two-wire 4...20 mA, with optional 0...10 V/0...5 V output
Overload Pressure: Typical value 2 times
Accuracy: Typical value⩽0.25%FS

SPT-OHV Off-Highway Vehicle Pressure Transmitter

Measurement Range: 0...6 bar, maximum 0...1000 bar
Electrical Signal: Two-wire 4...20 mA, 0.5...4.5 V proportional voltage output, Optional 0...5 V
Overload Pressure: Typical value 2 times
Accuracy: Typical value<0.5%FS

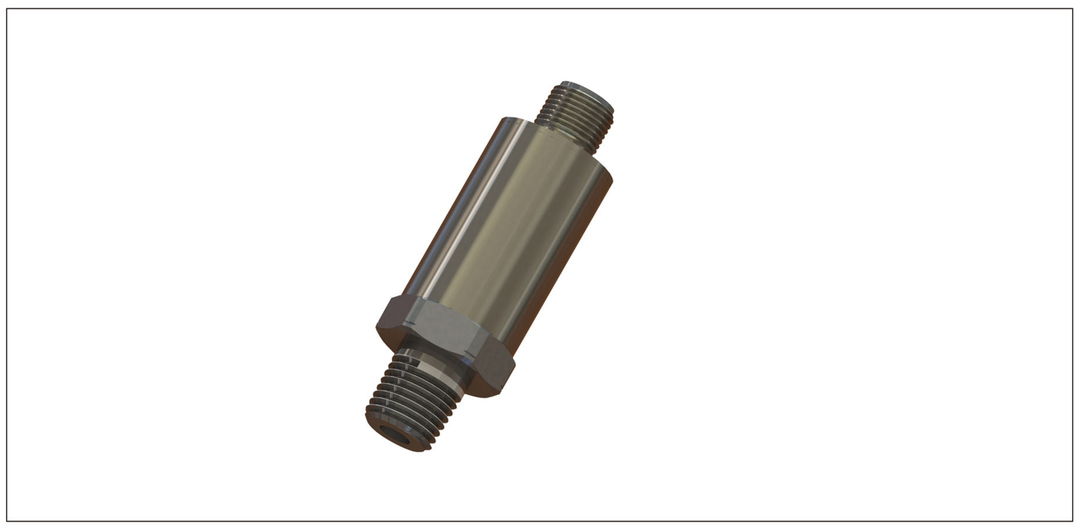

SPT-H2 Hydrogen Pressure Transmitter

Measurement Range: -1…0bar/0…1000bar
Electrical Signal: Two-wire 4...20 mA, three-wire 0.5...4.5 V proportional voltage output, Optional 0...5 V
Overload Pressure: Typical value 2 times
Accuracy: Typical value⩽0.5%FS

SPT-PH High-Pressure Transmitter

Measurement Range: 0…2000bar
maximum 0…5000bar
Electrical Signal: Two-wire 4...20 mA, 0.5...4.5V proportional voltage output, Optional 0.5...4.5V @ 5V / 0...5V / 0...20mA
Overload Pressure: Typical value1.5times
Accuracy: Typical value⩽0.5%FS

SKT-SK Pressure Transmitter

Measurement Range: -1…0bar/0…160mbar, maximum0-40bar
Electrical Signal: Two-wire 4...20mA, 0.5...4.5V proportional voltage output, Optional 0.5...5V (10V)
Overload Pressure: 2times
Accuracy: Typical value⩽1%FS

CIT-F Flat Diaphragm Pressure Transmitter

Measurement Range: 0...25 mbar to 0...250 bar
Electrical Signal: 0.5...4.5V proportional voltage output, 0...10V at 10...32V 0…5V bei 10…32V 4…20mA bei 10…32V
Overload Pressure: Typical value1.5times
Accuracy: ⩽0.35%FS

Overview of Sensor Products

In terms of the entire unit, the Soliner pressure sensor features a small size, wide measurement range, and low power consumption, which allows it to be easily embedded into various devices. It performs excellently in real-time monitoring of equipment operating parameters in industrial automation scenarios. Through highly integrated design, the complexity and cost of the system are effectively reduced, and the reliability and stability of monitoring are significantly improved.

CIT Series Pressure Transmitters

Measurement Range: 1mbar···1bar/-1···0bar/0···2000bar
Electrical Signa: Two-wire 4...20mA, 0.5...4.5V proportional voltage output, Optional 0...5V, 0...10V
Overload Pressure: 2 times
Accuracy: ≤1%FS/year

SPT-UR50 Pressure Transmitter

Measurement Range: 0···50bar
Electrical Signa: 0.5...4.5V (Proportional Voltage)
Overload Pressure: Typical value 2 times
Accuracy: Typical value≤0.5%FS

CTT Series Temperature Transmitters

Measurement Range: -40°C (optional -55°C) ... +150°C (optional 200°C)
Temperature Range: -40...85°C (ambient temperature), -40...150°C (media temperature)
Accuracy: ≤0.5%FS
Temperature Bar: 50mm···250mm Protection Class: IP65

CPS Series Level Probes

Measurement Range: 1mH2Ombar to 250mH2O
Temperature Range: -10...70°C (ambient temperature), -10...70°C (media temperature), -20...70°C (storage temperature)
Pressure Range: 0···100mbar mbar to 0···25bar
Long-term Stability: ≤0.1%FS

CHT-S Series Tester (Humidity/Temperature/Dew Point Transmitter)

Measurement Range: 60···+80°C, -40···80°C, 0···100%RH
Accuracy: - Temperature ≤ 40°C or RH > 20%: ±1.5K
- Temperature > 40°C or RH > 20%: ±2K
- Temperature 5···+60°C: ±0.2K
- Temperature -40···5°C or 60···80°C: ±0.5K
- Humidity 0···10% or 90···100%, Humidity 10···90%:

DDPT Series Differential Pressure Sensors

Measurement Range: 0···1mbar bis 0···100mbar
Electrical Signal: 0···10V, 4···20mA
Accuracy: ±1.5% FS (optional < 0.15% FS); ±3% FS at 50 Pa
Compatible Threads: Only the hose thread adapter with a diameter of 5.6mm is compatible.
Electrical Connection: Cable Gland

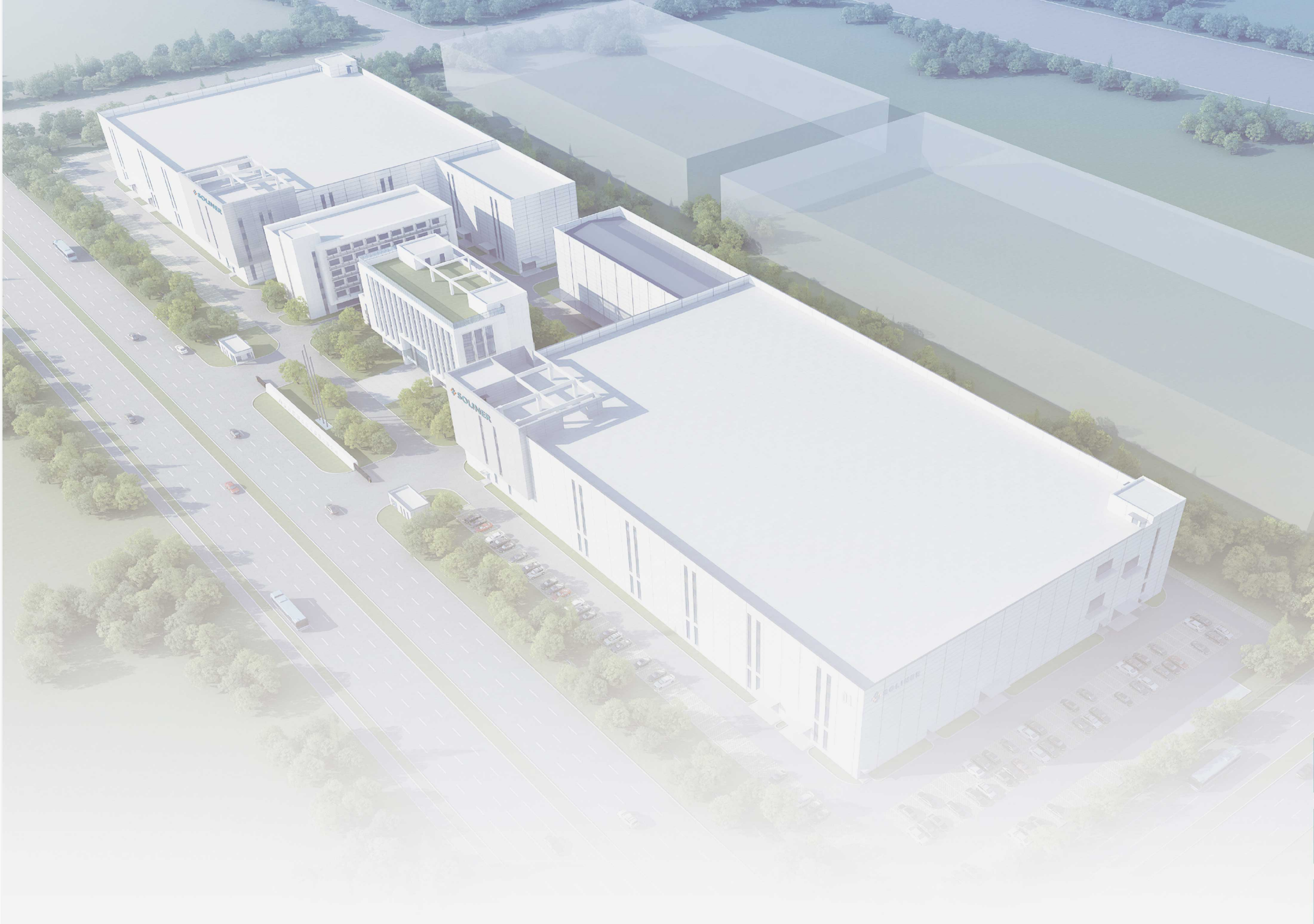

Contact Information

Delphine Wang
Email:delphinewang@solinerglobal.com
Phone/whatsApp:0086 18061725418

Sunny Li
Email:sunnyli@solinerglobal.com
Phone/whatsApp:0086 18061725467

Raven Huang
Email:ravenhuang@solinerglobal.com
Phone/whatsApp:0086 18061725380

Lucas Liu
Email:lucasliu@solinerglobal.com
Phone:0086 18061725469
WhatsApp：0086 13966820144

Tel: 0086 (25) 8533 3695
Address: No. 22, Tianma Street, Qixia District, Nanjing City, Jiangsu Province, China
www.solinerglobal.com